ISSN : 0308-2237

(CV) NEWS LETTER 22

Comité Technique du corpus Vitrearum

Physics, University of York

27 October 1976

CONTENTS

1 GENERAL

1.1 THE 10th C.V. COLLOQUIUM IN GERMANY, MAY 1977

Preliminary plans for this meeting were given in section 1.2 of N.L. No.21. The arrangements have still not been finalised but it has not been possible to arrange for the Comité Technique to meet in Switzerland; instead, it may now meet on 25th May at Oberkirch, in the Schwarzwald. Fuller details will be given when the arrangements have been finalised.

1.2 SYMPOSIUM ON THE CONSERVATION OF STAINED GLASS, YORK, JANUARY 1977

The Crafts Advisory Committee and the Institute for Advanced Architectural Studies are cooperating in the organisation of a symposium on the conservation of stained glass, to take place at the King's Manor, York, on 9, 10 and 11 January 1977.

The programme will comprise lectures by specialists from Britain and overseas as well as discussions and visits. The visits will be to the Minster and other buildings containing important historic glass, and to the workshops of the York Glaziers Trust. The Symposium will begin on the Sunday afternoon and continue through until late afternoon on Tuesday, 11 January.

The conference fee of £20 covers all costs including bed and breakfast, hotel accommodation and all meals in the King's Manor. Further details, programme and application forms may be obtained from David Rymer at the Institute of Advanced Architectural Studies, University of York, King's Manor, York YO1 2EP (tel: 0904 24919) or Vivien Lawson at the Crafts Advisory Committee, 12 Waterloo Place, London SW1Y 4AU (tel: 01 839 1917). Closing date for receipt of applications is Friday 26 November 1976.

In certain cases the Crafts Advisory Committee may be able to offer small bursaries towards the conference fee and travel expenses. Separate application forms for these should be obtained from Vivien Lawson at the Crafts Advisory Committee.

1.3 LIST OF ROUNDELS

The Belgian Committee of the Corpus Vitrearum is preparing an international list of roundels in order to make a comprehensive study of these interesting Dutch, English, Flemish, French and Rhemish articles which were produced in such vast numbers in the 15th and 16th centuries. They define a roundel as any small piece of decorated flat glass; round, oval or rectangular in shape; generally of colourless glass with a painted design, with or without silver stain; or enamelled in later work. They do not exclude "fakes" or recent copies of earlier work.

The Committee wishes to obtain information about every piece in existence and this formidable task is being co-ordinated by Mlle. Vanden Bemden, at Chaussée d'Alsemberg 1033D, Bte.110, 1180 Bruxelles, Belgium. Will everyone with knowledge of the existence of any roundels please write to her about them.

The Committee, and Miss Vanden Bemden, will have a formidable task because there are so many roundels! Nevertheless it will make a useful start if the existence of roundels can be sent to Brussels.

1.4 MORE OXIME-CURED SILICONES

N.L. No.21, section 1.4.2, contained a note about some Dow-Corning oxime-cured silicones that do not liberate acetic acid which can attack lead and produce a white crust. Mr A.M. Haward, of Vallance & Co. (Morley) Ltd, Queens Road, Morley, Leeds, LS27 0QJ now tells me that there is another oxime-cured silicone available in Britain which is manufactured by the General Electric Company of the USA. This material is G.E. Construction Silicone "Silpruf" and it is available from Vallance & Co. in five colours (Limestone, Aluminium Grey, Precast White, Bronze and Black) but there is no transparent version such as may be more useful when sealing plated glass. When used with lead, the metal must be completely cleaned, degreased, and then treated with the primer SCP 3153.

1.5 RESINS AND "PROTECTION" OF GLASS

There is still much controversy as to whether or not resin films can protect glass against weathering. My attention has been drawn to a report in which the authors state, from thermodynamic reasons, that epoxy resins can never offer complete protection to glass against attack by water. This important paper has been abstracted as No.241 on page 11. See also Nos. 235, 236 and 237.

1.6 CONSERVATION STUDIES IN SWITZERLAND

Dr J.C. Ferrazzini, who represented Switzerland on the Comité Technique until he published his article in "Weltkunst" (see abstract No.224 in N.L. No.20), tells me that, as from 1st July, he has been appointed as a scientific expert at the Institut für Denkmalpflege at the Eidgenossische Technische Hochschule in Zürich. His grant from the Volkswagen Foundation has been extended and he will now also be responsible for the conservation of other materials, such as mortar, plaster and stone, as well as of glass.

He adds that his primary concern will always be the protection of works of art, regardless of the political overtones which so often intrude on the scientific problems. In this connection he has just completed a scientific study of the effects of Viacryl coatings, and an English translation of his paper will be included in Newsletter No.23.

1.7 SPONTANEOUS CRACKING OF GLASS IN STORAGE

Many references have been made in these News Letters to the strange problem of spontaneous surface cracking which occurs in some medieval glass (see, for example, N.L. No.8, abstract 157; N.L. No.17, section 1.6; and N.L. No.21, abstract 227), but we are still no nearer to reaching an answer to the problem. It has, however, recently been observed that glass which has been stored in a centrally-heated workshop for a long time seems to have developed more cracks. It is clear that glass must not be stored in damp atmospheres (see, for example, abstract No.212 in N.L. No.17) but abstract 186 of N.L. No.15 draws attention to the damage which occurred when a 15th c. roundel had been hung near a heater for 10 years. It thus seems that persons who have glass in their care for long periods should try to avoid humidity conditions outside the range 40% to 70% relative humidity.

1.8 MEASUREMENT OF CONDENSATION - PART 1

The discussion in section 3.2.4 of N.L. No.21 showed that it will be important to learn how often condensation occurs on protected medieval glass, when different types of glazings are used, at least during the winter months.

One very convenient way of learning when condensation starts is to use the Plaster of Paris incipient condensation gauge which is described below. It was used in the isothermal experiment at Sheffield (section 2 of N.L. No.15) and in the externally-ventilated window at York Minster (section 2 of N.L. No.16, and Verres et Réfractaires 1976 30 80-86), and we had considered using it with the automatic integrating condensation recorder now being designed at the University of York (N.L. No.21, section 3.2.4). However, it has become evident that, although the Plaster of Paris gauge is excellent for detecting the start of condensation, it is not so useful for deciding when condensation ceases. The gauge is porous and condensed water can enter the pores, so that it may stay "wet" longer than will the glass. The glass will start to dry as soon as the condensation-conditions stop but the gauge is likely to stay "wet" longer.

However, the Plaster of Paris gauge is a simple and useful method of anticipating the start of condensation and it could, for example, be used to switch on any electrical heating wires placed in the cavity. The gauge was devised by Mr D.B. Honeyborne and Dr C. Price, of the Building Research Establishment, Garston, Watford, WD2 7JR, based on a system described by Croney, Coleman and Currer (Brit. J. App. Physics, 1951 2 85-91) and also (by D.B. Honeyborne) in Rilem Bulletin No.15, 1962, 73-84. In making the gauges, as used at Sheffield and at York Minster, an area of glass, about 30mm diameter was thoroughly cleaned with soap and water and rinsed well. Then a "mushy" mixture of Plaster of Paris was prepared and allowed to stand for a minute or two.

Some tinned copper wire (eg 30 SWG:0.33mm), about 300mm long, was doubled into a loop and then wound into a flat double spiral, so that the wires did not touch, and the end of the loop was bent at right angles so that it stood out from the plane of the spiral. The outside diameter of the spiral was about 20mm and the free ends were attached to the glass with adhesive tape so that the spiral lay over, and close to, the cleaned portion.

The partially-set Plaster of Paris was then pasted over the spiral and pressed down with a spatula, so that the wires were only just below the surface and they could also be seen through the back of the glass. The tip of the loop would then protrude well above the surface and care was needed to avoid pressing it down or altering the spacing of the wires.

Before the plaster was fully set it was trimmed with a sharp knife to the minimum size consistent with retaining the wires; thus the wires should just appear on the top surface and the gauge would have the optimum sensitivity. When fully hard, the tip of the loop was cut off close to the plaster. When quite dry the resistance between the free ends of the wires was tested to ensure that the wires in the spiral were not touching.

In the dry state the gauge will have a resistance of hundreds of megohms but when the humidity is 98% or more the resistance falls to tens of thousands of ohms. When condensation occurs, the resistance falls to a few thousand ohms, and it is easy to devise electrical circuits to control indicators, or recorders. An important point is to operate the gauge on alternating current only; it will rapidly become polarised if direct current is used.

Further attention is being given to gauges with more rapid drying-out times, and also to self-registering integrating condensation gauges to record the amount of condensation occurring each day or each week.

2 "KITE - FLYING"
«BALLONS D'ESSAI»
„ZUR DISKUSSION (GESTELLT)"
PART 1

This new "Kite-Flying" section has been introduced so that untested suggestions can be put forward for early discussion. It is hoped that readers will send me any kind of proposal for assisting conservation, and that other readers will send their comments as to whether or not the proposal will be helpful, and whether it could be improved.

Mr Peter Gibson, of the York Glaziers Trust, has kindly produced a most interesting design for a window with external protection and external ventilation; it has not yet been put into practice but it is included in this section so that comments and criticisms can be received from readers. The particularly novel feature is that the gap between the two windows is only 10mm wide.

Both windows would be supported on a manganese bronze T-bar with an extra-wide (30mm) horizontal flange. The stained glass panel would be pressed against the vertical flange and held in place by the wedges shown in Fig.1. These wedges are 10mm wide at the top and thus hold the two windows in place so that there is a constant gap of 10mm. The outer protective window is then placed on the T-bar, pressed against the wedges and held in place by the usual copper pins as shown in Fig.1.

Air circulation up the space between the windows would be achieved through the slots cut in the horizontal flange of the T-bars. Only a slow circulation of air is required and the slots, which are here shown as 6mm wide and 50mm long, could be as long as is desired (no doubt the mechanical convenience in cutting the slots will probably be more important than their length for ventilation purposes) but the total length of the slots should be about half of the width of the window.

In installing this type of window, the glazing groove in the stonework would be cut somewhat wider, probably 30mm (or 35mm at the positions of the T-bars). In Fig.1 the T-bar shown does not project beyond the width of the panels but the design can easily be modified so that the T-bar can be mortared into the stonework as deeply as desired.

This very narrow gap between the two windows has two important advantages. The window is only about 15 to 20mm wider than the ordinary stained glass window and hence there will be a negligible loss of the gothic mouldings on the outer faces of the mullions; this will make the proposal more acceptable to those architects who deplore the way in which the present protected windows at York Minster have the effect of making the walls appear thinner.

The second important advantage concerns the aesthetic appearance of the outer window. The two windows are so close together that the outer one can be cut and leaded according to the main lead lines of the stained glass, preferably using a slightly thinner lead for the external protective glazing than that used for the stained glass panels. Thus it will have an appearance of a stained glass window from outside, in that the mean features of the design will be seen in the leads, but the effect of parallax will be reduced and the two designs, including the shadows thrown

WHY GLAZE FROM THE OUTSIDE
IT MEANS THAT YOU CANNOT REMOVE THE STAINED GLASS
WITHOUT FIRST REMOVING THE PROTECTIVE

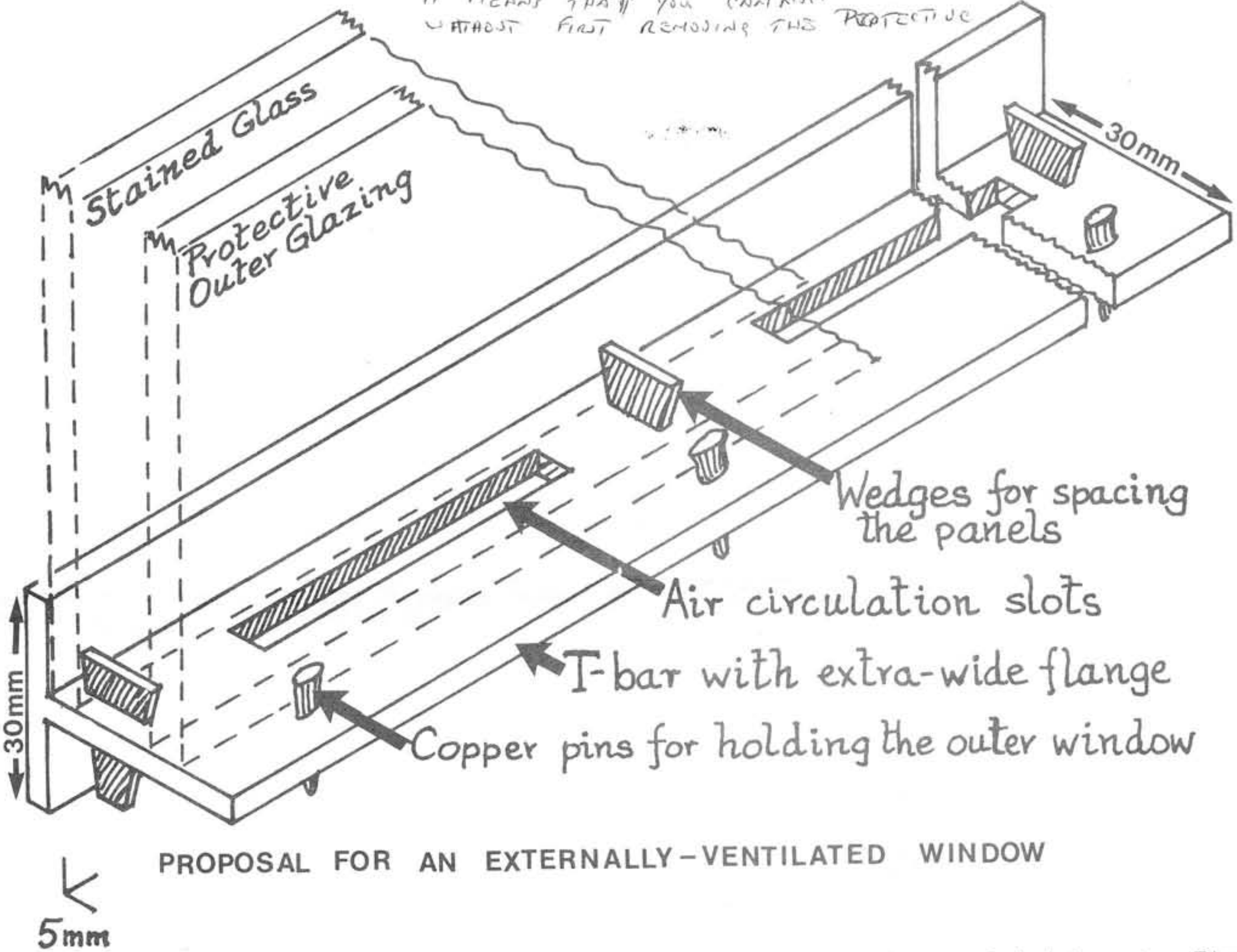

Fig. 1 This shows the suggestion for making an externally-ventilated double window with a very narrow interspace. Both windows rest on a T-bar with an extra-long flange and the 10 mm spacing is maintained by wedges. The ventilation air passes through slots cut in the horizontal flange of the T-bar.

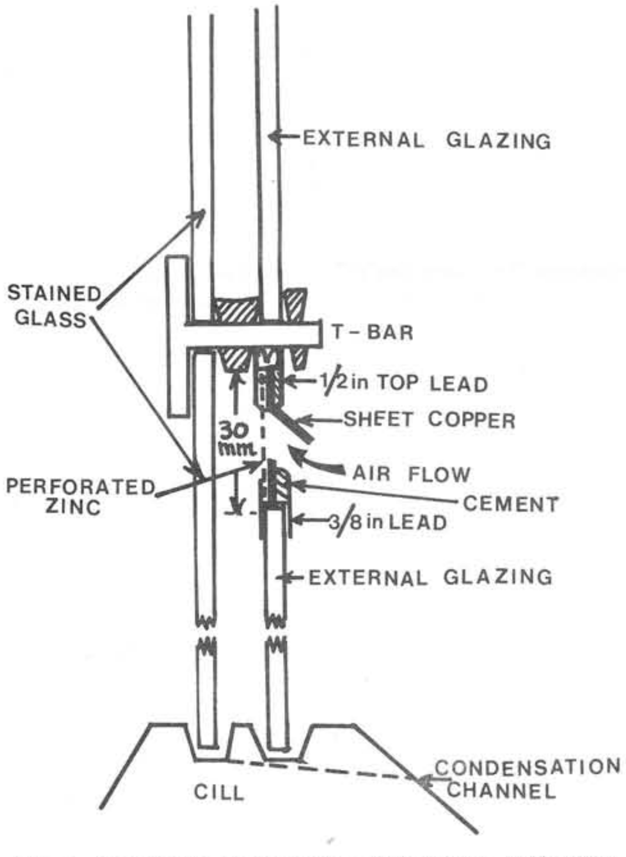

Fig. 2 This shows a vertical section of the window, and how the air-flow is introduced at the top of the lowest panel.

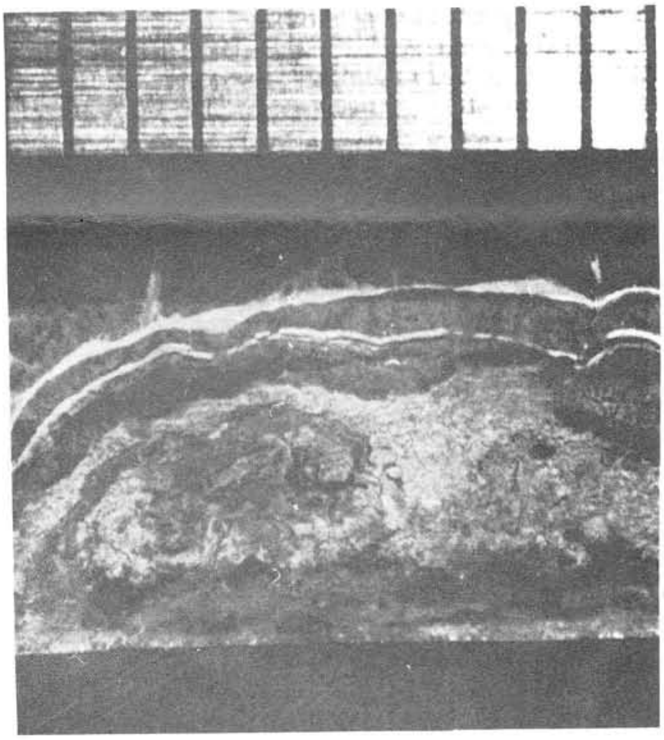

Fig. 3 The deposits on the plating glass after 25 years at Winchester College Chapel. The scale at the top is in millimetres.

by the outer leads, may not seriously interfere with each other when viewed from the inside.

There remains the question of allowing air to enter at the bottom of the window, and leave at the top, without allowing driving rain (or small insects) to enter. The proposals are shown in Fig.2 where the interesting suggestion is made that the lower ventilation aperture should not be at the sill level because it is possible that dirt could accumulate there and impede the ventilation, or rainwater could collect behind an accumulation of dirt and make the bottom of the cavity wet. For these reasons the lower ventilation aperture is placed at the top of the lowest panel! The apertures (some 10mm high and 50mm long) are cut (along the bottom only) in a strip of sheet copper (No.20 gauge, 1mm thick) which is soldered to a strip of perforated zinc (standard zinc gauge No.8, 30mm high and the width of the window) in order to exclude the larger insects and small leaves and feathers. The zinc and copper are "glazed into" the top part of the panel, using a 1/2-inch top lead and a 3/8-inch lower lead to form the seals. The top of the top lead would be turned over with the lavekin and the lower part would be cemented to the copper and zinc strips. (In Fig.2 the cement has been shown where the zinc and copper are fastened into these leads, but it has not been indicated at any of the other points where it would be used.) At the sill level the usual condensation channels would be retained; at York Minster there are usually two for a panel 36 inches (915mm) wide and they consist of a groove approximately 20 x 20mm cut into the stone sill below the bottom lead of the panel and extending from the interspace to the outside of the window.

The cut sections of the copper strip, 50mm at the bottom and 10mm at each end, are bent upwards at an angle of 45° to form a rain shield and a ventilation aperture. Here, again, the total length of these slots should be about half of the width of the window. It might be thought that this arrangement would not ventilate the lowest panel, but experiments at York Minster with smoke generators have suggested that much turbulence occurs within the cavity and it is believed that adequate ventilation of this part of the window would occur.

At the "head" of the window the same arrangement is proposed. In order to avoid shaping the copper strip around the stonework, the arrangement in Fig.2 would also be used at the springing level, or at the top of the highest rectangular panel.

This proposal has not yet been put into operation but it is hoped to glaze an experimental window in York, using these ideas.

3 ENVIRONMENT INSIDE PLATINGS - PART 3

3.1 INTRODUCTION

Studies of the environment inside "plated heads" are important for two reasons. First, we usually know how long the plated head has been exposed to the weather and we can make reasonable assumptions about the original condition of the modern glass. Thus there is the possibility of devising an "index" of the rate of deterioration of modern glass in the environment inside the plating, compared with the noticeable and permanent attack produced in about four years by the presence of continuous condensed moisture. Second, many platings which are 20 to 50 years old look really horrible because the deposits in the cavity are so unsightly and we want to know whether the failure has caused the medieval glass to deteriorate or not, and how to make better platings in the future.

Two reports have already been made. In "Part 1", the plating of a Canterbury head was studied (see N.L. No.10, item 2 and No.12, item 1.4) and it was concluded that the modern glass had suffered no damage at all during exposure for 30 years. The conclusion was drawn that the seemingly-harmful conditions in the cavity had not actually been harmful to glass.

"Part 2" consisted of a report on two platings, Resa's head at Canterbury, and a plating from the Austrian church at Waidhofen-on-the-Ybbs (see N.L. No.14, item 2.4). In the case of Resa's head the 50 to 60-years old glass had been quite unaltered on face 2, and in the Waidhofen case the modern glasses were quite unaltered on faces 2, 5 and 6 but face 1 had been extensively scratched (see Fig.5 of N.L. No.14). Thus, up to the present, it has not been possible to show that any harm has been done to the modern glass.

3.2 GLASS FROM WINCHESTER COLLEGE CHAPEL

Mr Dennis King, FSA, has kindly supplied some pieces of plating-glass from a plated head in Winchester College Chapel (Lat. 51°3'N. Long. 1°19'W) which had been in the window for 25 years. It is evident that water had collected (presumably periodically) at the bottom of the cavity and produced the series of "tide-lines", accompanied by noticeably thick deposits, (about 0.4mm thick) on face 2 as is shown in Fig.3. It was of interest to determine the nature of these deposits and whether they had caused any corrosion of the glass.

The scientific study was likely to be an exceedingly difficult one to carry out and hence Professor H. Oel was asked whether the work might be done in his Department at Erlangen (laboratory No.4.1 on p.7 of N.L. No.19). He kindly agreed, and the investigation was entrusted to Dr J. Varner to whom we are indebted for the results.

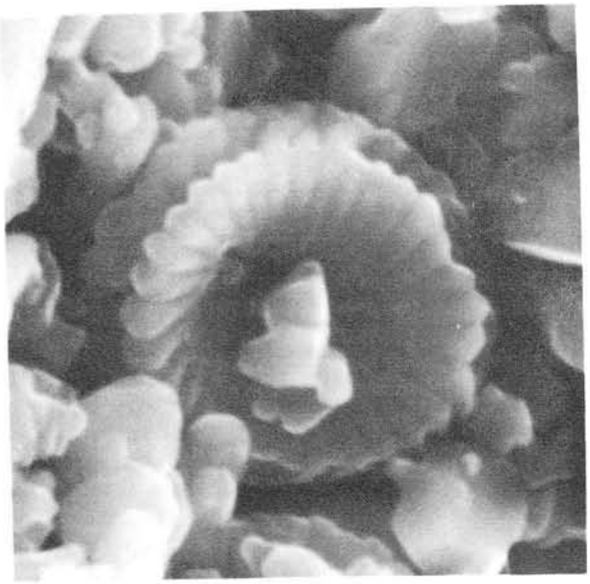

Fig. 4 A much-enlarged (x 10,000) stereoscan view of one of the coccoliths found in the deposit on the plating. This coccolith is 6μm in diameter.

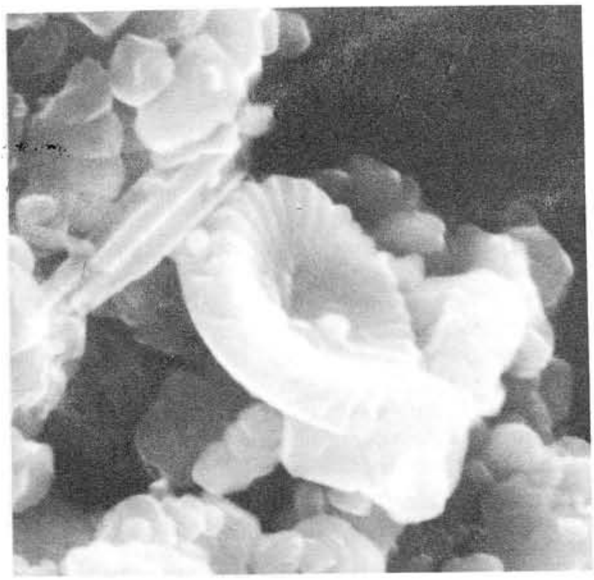

Fig. 5 A much-enlarged (x 7,000) stereoscan view of the three species of coccolith discussed in section 3.2.

Mr Dennis King is of the opinion that the medieval glass showed no signs of attack after it had been cleaned in 1951, and the examination of the plating glass at Erlangen did not reveal evidence of attack by water or the deposits; after washing, face No.2 was quite bright and shiny. An X-ray diffraction study of the deposits showed that they consisted solely of calcite (a crystalline form of calcium carbonate) and there were no signs of sulphates, showing that "air pollution" had not affected the inside of the cavity.

The calcite in the cavity did not come from the medieval glass because, as can be seen from the Scanning Electron Microscope pictures (Figs. 4 and 5), the deposits contain many micro-fossils. Mr A. Medd, of the Institute of Geological Sciences, in Leeds, has kindly examined Fig.5 and he has identified three coccoliths of Upper Cretaceous age of the following species:- *Watznaueria barnesae* (Black), *Lithraphidites carniolensis* Deflandre and *Biscutum blacki* Gartner. These species are typical of chalk from the Turonian to Santonian stages.

So how did these coccoliths get in the cavity? Four hypotheses have been put forward:-

(a) The putty used for sealing the cavity might have been made from ground chalk, instead of the usual precipitated whiting (this seems the most likely hypothesis).

(b) They may have been present in the limestone of the building and been washed into the cavity. Mr John H. Harvey, FSA, FRSL, the Consultant Architect to Winchester College, has listed the ten kinds of stone which were used in building the chapel, but none of these would contain Santonian coccoliths.

(c) They might have been windborne chalk dust which had entered the cavity, but the presence of three different coccolith species, all in an excellent state of preservation, and in close association, makes this seem improbable.

(d) Mr Harvey also tells me that the core of all the thick ancient walls of the College is of hard "chalk" blocks of the kind known as "Alton Clunch". In the course of anchoring the stainless steel reinforcement which runs across the window at springing level, the core of the walls was cut into and large amounts of "chalk" dust would have been released shortly before the fixing of the restored glass in 1951. However, Mr Medd tells me that Alton Clunch is a limestone, rather than a true chalk and is either Basal Upper Cretaceous (Cenomanian) or Top Lower Cretaceous (Albian), i.e. *older* than the fossils in Figs. 4 and 5.

Unfortunately I have not yet been able to obtain a scraping of the putty used on the plated heads at this restoration, nor of the chalk core, and hence it has not been possible to confirm whether one or the other was the source of the coccoliths.

The main conclusion from this study is that there is no reason to believe that any harm had been caused to any of the glass by the repeated presence of water in the cavity. This emphasises the importance of obtaining some *experimental* evidence of the effects of repeated condensation (see section 6).

4 TWELFTH - CENTURY YORK SODA GLASS - PART 3

The interesting story of the unexpected discovery of 12th century soda-rich blue glass at York Minster has now been taken a significant step further. Readers will remember that this discovery was described in sections 4 and 5 of N.L. No.18, where mention was made of three pieces of glass - sample Nos. 268-270 (please note that there is a printing error in the fourth line from the bottom of section 4.1, on p.9, where "10% soda" should be "1.0% soda"). The second report appeared on pages 4 and 5 of N.L. No.20, where it was shown that this glass is rather rare, only 72 pieces having been found in a search of probably 20,000 possible pieces of 12th century glass at the Minster.

Small fragments (1.3 to 7.7 mg in weight) of the three samples referred to above (Nos. 268-270), together with a similar fragment of a fourth piece (No.271) taken from the stock in the workshop of the York Glaziers Trust, were sent to the University of Bradford. There, by the kindness of two of the research staff (Mr J. Crummett and Mr S.E. Warren), these fragments were submitted to Neutron Activation Analysis (N.A.A.) with the object of discovering whether any unusual trace elements were present which might help in identifying the source of the glass. The irradiation of the fragments was carried out in the "Herald" reactor at Aldermaston, using a neutron flux of 2×10^{12} neutrons per cm^2 per second for 24 hours. A fifth sample (No.272), having quite a different composition, was irradiated at the same time; it was 14th century Austrian glass from St. Michaels-i-d-Wachau and it serves as a marked contrast to this blue soda glass; acknowledgment is made to Dr Eva Frodl-Kraft for kindly providing this sample.

Three days after the irradiation at Aldermaston, Messrs Crummett and Warren measured the amounts of the short-life isotopes:- ^{24}Na, ^{42}K*, ^{140}La*, ^{64}Cu and ^{198}Au. After a further 30 days they measured the amounts of the longer-life isotopes:- ^{124}Sb, ^{60}Co, ^{46}Sc, ^{110m}Ag*, ^{59}Fe, ^{65}Zn, ^{181}Hf and ^{131}Ba*. (* = These have not been reported in the table below because the amounts present were generally below the reliable limit of determination, except that the Austrian sample No.272 contained 18.4% of K_2O, 194 ppm of Ag and 0.003% Ba.)

These results show that the four pieces of blue glass from York Minster are obviously closely similar to one another although the general analyses (reported on P.9 of N.L. No.18) showed that No.268 tended to be somewhat different from Nos. 269 and 270, which were rather similar to each other; No.271 seems slightly different again, but the Austrian glass (No.272) is quite different in every respect.

NEUTRON ACTIVATION ANALYSES (N.A.A.)
OF 5 GLASSES

Sample No.	268	269	270	271	272
Na_2O (%)	16.3	16.4	16.3	17.4	0.24
Antimony (%)	0.87	0.84	0.87	0.95	0.02
Cobalt (ppm)	530	520	540	630	10
Scandium (ppm)	2.3	2.2	2.1	2.2	1.3
Copper (%)	0.1	0.2	0.1	0.05	0.08
Iron (%)	1.6	1.6	1.4	1.6	0.6
Zinc (ppm)	200	300	250	450	220
Hafnium (ppm)	7	8	8	8	1
Gold (ppm)	0.4	0.5	1.0	0.6	0.8

However, the particularly interesting feature is the relatively large amount of the rare metal hafnium in the York blue samples. Hafnium is always associated with zirconium and it could well have been a trace-element in the sand. It will now be important to look at other 12th century soda glass, such as that from Chartres and St Denis, to see whether hafnium is present in those samples also; it is hoped that N.A.A. determinations can be carried out on some samples recently received from M Bettembourg.

(Note by RGN - here I should point out to the non-scientists that the general chemical composition of a piece of glass cannot be a reliable indicator of its affinities, because these ordinary analyses (such as those given in section 5 of N.L. No.21) really only tell us that "the glass is made of glass-making materials" - which was obvious anyway! However, the situation with these N.A.A. results is quite different because the antimony, scandium, zinc and (especially) the hafnium are not essential glass-making materials and they could well provide a valuable "finger-print" of the raw materials used in making this blue glass.)

Finally, in addition to thanking my colleagues at the University of Bradford I must thank: the Dean and Chapter of York Minster, the custodians of the glass, for their ever-helpful attitude to these scientific experiments; Mr Peter Gibson for selecting, removing and replacing the main pieces of glass; and the Trustees of the Pilgrim Trust whose Special Grant paid the costs of removing and replacing the main pieces of glass in the Minster window.

5 ADVERSE (WAR - TIME) STORAGE OF GLASS - PART 7

On six previous occasions I have referred to the possibility that the storage of medieval glass under wet conditions during the war may have been a significant cause of subsequent serious deterioration in the post-war period (see N.Ls. No.9, section6; No.10, section 4; No.12, section 1.4; No.14, section 3; No.15, section 3; and No.16, section 3). Now I have learnt of two more situations which may demonstrate the same effect.

5.1 THE WINDOWS AT YORK MINSTER

Mr Peter Gibson has recently made a careful study of the present condition of the windows at York Minster, and we have drawn some most interesting preliminary conclusions which deserve further discussion by all conservators and art-historians who have this question at heart.

Of 64 main windows (not clerestory windows) which have glass that is earlier than the 19th century, 42 were either in "good" of "average" condition. These windows which had NOT suffered undue corrosion consisted of: (a) all of the windows later than the 14th century and (b) 15 of the 37 windows of 14th or 13th century date. The remaining 22 windows (about 1/3 of the whole) are discussed below.

5.1.1 The position of the windows

Of the 37 windows which are 14th century or older, 22 are in a worse-than-average condition, i.e., Nos. 3, 4, 10, 16, 38, 39, 40, 41, 42, 49, 50, 52, 54, 55, 56, 57, 59, 60, 61, 62, 63 and 64, and it is of interest to discuss some possible reasons why they are now in a worse condition than the other 15 windows of a similar date. The first observation is that they are all on the north side of the cathedral (or in the Chapter House, which lies on the north side of the main building), except No.10 (which is in the east end) and No.16 (which is on the south side and is not an original Minster window). There have been frequent references in the literature to a tendency for greater deterioration to occur in north-facing windows and this observation may be another example of the same effect.

5.1.2 Lack of "washing" by heavy rain, and the presence of flue gases.

Four of the windows (Nos. 49*, 50, 62 and 64) are in a noticeably worse state than all the others; they are described as 85% to 95% severely corroded, and they have been exposed to specially adverse conditions. (No.49 is the only 13th-century window (the "Five Sisters") and is in the north transept.) The other three windows are all on walls of the vestibule to the Chapter House where (a) they are sheltered from heavy rainfall and (b) they are near the Minster chimney.

Factor (a) could mean that the soluble products of corrosion, and also other dirt including pigeon droppings, are not "washed" from the window when there is heavy rainfall accompanied by windy conditions. Factor (b) could mean that these four windows might have suffered attack from condensation of water from the flue gases (and perhaps also carbon dioxide) because the Minster was heated by coke-fired boilers for the first 65 years of the 19th-century, and the chimney passes near them. This chimney is on the east side of the vestibule, close to windows 62 and 64 (No.63 has external protection), but it reaches to the top of the roof and the flue gases could pass over the roof and be drawn down to windows 49 and 50. (Although No.49 has external protection, the glazing is known to be "leaky" and the flue gases could enter the cavity.)

Not only are windows 50, 62 and 64 all sheltered from the rain, but all are in a position where they could be influenced by the flue gases, and two (50 and 62) were stored in the same cellar during the war.

5.1.3 Storage in wet cellars during the war

Many of the remaining windows were stored in adverse conditions in damp cellars during the war. Three of the cellars (a, b and c below) are known to have been very wet.

(a) Thicket Priory The cellars were exceedingly wet and the boxes developed "dry rot" fungus (Merulius lachrymans), so much so that the glass had to be re-packed before it could be returned to the Minster. Windows 10, 49 (part), 55 and 56 were stored here and all are now in an exceptionally bad condition. No.51 also was stored here and it is now in an "average" condition (it also has external glazing); three 15th-century windows were stored here.

(b) Deanery Garden, "corner dug-out" This is exceedingly wet (and it is now used for the "sawdust" experiments); windows 3, 49(part), 54, 60 and 61 were stored here and all are now in bad condition. Six 16th and 18th century windows were also stored here.

(c) Deanery Garden, "the ice-house" This, also, is very wet (it is below ground level, having been used to store snow in the 18th and 19th centuries). Windows 41, 42 and 49(part) were stored here and all are now in bad condition.

Thus all eleven of the 14th-century windows (except No.51) stored in these wet cellars are now in bad condition.

(d) Howsham Hall This is not reported as having been very wet, and its war-time condition is not known but Nos. 50 and 62 were stored here (now in very bad condition, see 5.1.2 above) together with No.52 (40% heavy

---

* Footnote. This 13th-century window has external protective glazing but it is known to be badly corroded.

corrosion) and No.28 (now in "average" condition). Three 15th-century windows were here also. Thus Howsham Hall may have been damp, or there may have been some other environmental reason for 3/4 of the 14th-century windows being in a bad state.

(e) Kirby-Misperton, also, is not reported as having been very wet but five of the remaining nine windows were stored here (Nos. 38, 39, 40, 59 and 64) and all are in bad condition. Three other 14th-century windows were stored here (Nos. 2, 35 and 37 - two good and one with some severe pitting).

Only four windows have not been discussed (Nos. 4, 16, 57 and 63) but no "reasons" have yet been suggested for their below-average condition. For record purposes the remaining storage places were:-

(f) Hovingham Hall where Nos. 16 (a bad one), 30, 33, 41(part) and 53 were stored, together with one 17th-century window.

(g) Nun Appleton Hall where Nos. 32 (good condition), 57 and 63 (both bad ones) were stored, together with one 15th-century window.

(h) Nunnington Hall where No.4 (a bad one), No.13 (average) and three later windows were stored.

(j) Bishopthorpe Palace (four 15th-century windows).

(k) Langton Hall Nos. 26, 27, 29 (average condition) and seven 15th-century windows.

(l) York Minster Crypt No.34 (good condition).

5.1.4 Discussion

To some extent this investigation was inconclusive, because so many windows were exposed to more than one adverse environment (north exposure, shelter from rain, chimney fumes and damp cellars), but some conclusions are noteworthy. Much the worst windows are in the small group discussed in 5.1.2 and here opinions will differ (I personally favour the "rain-wash" hypothesis because these windows are so crusted and dirty on the outside). The "wet-storage" hypothesis also (in my view) gains much support from the high proportion of "bad windows" (ten out of eleven) stored in these very wet cellars.

5.2 GLOUCESTER CATHEDRAL - GREAT EAST WINDOW

In section 3 of N.L. No.15 I stated that the Great East Window of Gloucester Cathedral (Lat.51°51'N; Long.2°14'W) was of special interest for investigating the possible effects of adverse war-time storage of 14th-century glass because the central part of this very large window had been stored in the cellars of the House at Miserden Park whereas the North and south sections had been stored in the very damp crypt of the cathedral.

When I visited the cathedral in April 1975, the tele-photographs which I took from the roof of the Lady Chapel suggested that the two side sections were more corroded than the centre section. Thus the damp crypt might have damaged the glass (or pre-disposed it to more rapid post-war deterioration).

Now I am glad to report that scaffolding has been erected on the outside of this window (so that it can be cleaned in situ) and Mr Edward Payne, the Master Glass Painter in charge of the work, has kindly supplied the following comments:-

"The centre lights are altogether in a better state of preservation than either of the two side bays. Of these the south side (which gets more sunlight) is much more pitted than the north bay, and has greater areas of decomposed glass. The glass in the centre lights, shielded (from the sun) by the Lady Chapel, is very well preserved. My assistant, Mr Peter Strong, has commented that the glass in the side bays is made up of a jumble of medieval fragments and hence is not an exact parallel with the centre lights.

"As regards the harmful effect of sunlight, this is confirmed from my own experience of the medieval glass at Stone, near Bristol, where the glass on the south side of the church has perished more than that on the north."

These interesting observations by Mr Payne and his assistant support my earlier view that the glass in the side windows (which had been stored in the damp crypt) has deteriorated to a greater extent than that in the centre section.

6 EFFECTS OF REPEATED CONDENSATION - PART 1

During the last few years there has been an assumption that repeated condensation of water on the surface of a poorly durable glass could produce relatively rapid corrosion. The argument was that the "first droplets" would become alkaline by ion-exchange; the pH value would rise above 9 as the droplet dried out; the silicate network would be attacked; and a nucleus would have been created which would predispose the droplets from the next condensation cycle to form at the same points. Thus an ever-accelerating cycle of condensation and attack could be postulated, such as might be responsible for the formation of the deep isolated pits in the surface which are so frequently found, at least in British medieval glass.

Moreover, there even seems to be some confirmation of this belief because some church windows are corroded on the inside, as well as on the outside surface. This corrosion on the inside surface has been attributed to "condensation within the building". However, no researches were made as to whether there really had been excessive condensation inside the building, or why the corrosion was worse in that church than in others where there was little or no "inside" corrosion. (In Norbury Church, Derbyshire, the whole of the inside of the church can be very wet, and there is also much corrosion on the inside surface of the glass.)

What is needed is an experiment in which poorly durable glass is submitted to repeated cycles of condensation. One experiment has been done but, quite surprisingly, there was very little attack on the glass.

M J.M. Bettembourg kindly offered to use the facilities for accelerated weathering at the L.R.M.H., Château de Champs-sur-Marne, where the samples were exposed to the following cycles:-

1. Air temperature of 40°C, relative humidity 100%,
2. Evaporation at about 50°C,
3. Air temperature of 60°C, relative humidity 90%,
4. Condensation at 50°C,
5. As in No.1 again.

The three poorly-durable synthetic glasses used for the experiment were British simulated medieval glasses Nos. 1, 2 and 3 (see N.L. No.5, section 2.A). Two samples of each glass were used, one with a bright fire-finished surface and the other with a rough-ground surface. The samples were mounted on a sheet of 0.7mm sheet glass and exposed to the cycle of condensation for eight weeks.

After this period of exposure the surface was examined with a hand lens (x 10 magnification). The samples with the rough-ground surfaces show no evidence of any attack. The bright, fire-finished surfaces, have the following appearance:-

Glass No.1 - nothing visible, except one small "hazed" area about 3mm across.

Glass No.2 - there is a network of reticulated hazing with bright, unaffected, areas between them. The hazed lines are 0.2 to 0.5mm wide and the unaffected areas are 1.5 to 3.0mm across.

Glass No.3 - there is a network of iridescent hazed lines (0.1 to 0.3mm wide) with bright, unaffected, areas (1.5 to 3.0mm across) between them.

When viewed under the low-power of a microscope there is little to be seen on the surface of glass No.2, but there is surface-fissuring on glass No.3.

By comparison, when similar fire-finished samples were exposed continuously to moist air, free of CO_2 and SO_2, at 55°C and 100% relative humidity for only 130 hours there is dulling of the surface which is easily visible to the unaided eye. Under the low power of the microscope the samples show considerable erosion of the surfaces.

Thus repeated condensation seems to produce much less attack than does continuous exposure to somewhat similar conditions. It is essential that these experiments should be repeated, using the new series of simulated medieval glasses. (See N.L. No.20, section 1.6.)

7 ABSTRACTS

This section is now being called "Abstracts" instead of "New Abstracts" because sometimes they are quite old ones which have come to light, such as No.244 below.

235. DUKES, W.A. and GREENWOOD, L. (1975) "An adhesive system for an appliqué glass screen out of doors" Chapter 5 (pp.92-111) of Aspects of Adhesion 1975, Vol.8.

This is essentially the same as the unpublished paper abstracted as No.29A in the British Academy Bibliography (Occasional Papers I, Oxford University Press, 1974).

236. DUKES, W.A. and KINLOCH, A.J. (1976) "Preparation of surfaces for adhesive bonding" Review paper No.3 presented at the SIRA Seminar on Adhesives in Light Engineering, Cheltenham, 11-12 March 1976, 22 pages of typescript and 9 illustrations.

This is an excellent review paper containing 96 references to the literature and it is written in simple terms. The authors explain how the "free energy" of a surface contributes to the effect of the adhesive, why surface cleaning is so important, and why "roughening of the surface" is often not desirable. Although this is an important general article dealing with plastics, rubber and metals, it does not specifically mention glass.

237. GLEDHILL, R.A. and KINLOCH, A.J. (1976) "Weathering of epoxy-resin adhesives" Plastics and Rubber Institute Conference on Weathering of Plastics and Rubbers, 8-9th June 1976, 11 pages of typescript.

This is a scientific paper in which sophisticated equipment is used to study the kinetics of the environmental failure process, especially the failure of epoxy-resins when exposed to outdoor weather. They conclude that water must be prevented from reaching the interface, perhaps by treating the surfaces with a silane but even these deteriorate slowly when exposed to water (half the bond strength is lost after exposure to water for 60 days at 60°C). They also comment that the use of accelerated weathering tests at 90°C (5 degC above the Tg for the adhesive) can cause degradation of the adhesive, as distinct from loss of adhesion at the interface, and hence tests at these temperatures can give misleading results. Tests at 60°C seemed to be satisfactory for predicting the behaviour at normal temperatures (at least up to 100 days testing).

238. HENCH, L.L. (1975) "Characterisation of Glass" Chapter 8 (pp. 211 to 251) of Characterisation of Materials in Research, Ceramics and Polymers, Syracuse, 1975.

This chapter of the book provides an extremely comprehensive review of the scientific techniques which are available for characterising glasses, and it should be consulted by all scientists who wish to gain an understanding of the possibilities for studying the properties of glass. The sections on chemical analysis (pp. 212-215) and on the study of the surface of glass (pp. 232-243) are likely to be of the greatest interest in connection with conservation.

239. HENCH, L.L. and SANDERS, D.M. (1974) "Analysis of Glass Corrosion" The Glass Industry Feb.1974, pp. 12, 13 and 16; March 1974, pp. 18 and 19.

This is a popularised account of the paper abstracted as No.141 in N.L. No.5, where infra red reflection spectroscopy was discussed. Among the points described are the effects of high humidity on the storage of glass, and how the presence of a surface film may greatly influence the kinetics of the corrosion process.

240. HUDSON, A.P. and NEWTON, R. (1976) "A means for the in-situ identification of medieval glass by the detection of its natural radioactivity." Archaeometry, 1976 18, 229-232.

This is the published version of the account given in section 5 of N.L. No.18.

241. KINLOCH, A.J., DUKES, W.A. and GLEDHILL, R.A. (1975) "Durability of adhesive joints" pp. 597 to 614 of Adhesion Science and Technology Ed. L.H. Lee, Plenum Press, New York, 1975.

The authors show that immersion in water considerably reduces the strength and durability of joints between glass surfaces made with organic adhesives (p.604). This is due to the displacement of the resin from the surface of the glass by water, and they show that this displacement can be predicted from thermodynamic considerations, the rate of diffusion of water to the interface being the important factor.

The authors also discuss failure of the adhesive under stress, and how misleading results can be obtained unless the long-term testing is carried out in the environments likely to be encountered, but these "adhesive failures" (as distinct from bond failures) are not likely to be important for the conservation of medieval windows.

There is a discussion of the effects of silane treatment of the glass before the resin is applied; this can increase the environmental resistance of the bond but the silane may also increase the rate of diffusion of water along the interface (p.612), and hence (apparently) impair the long-term nature of the protection. (RGN - this is an important paper because it suggests, on thermodynamic grounds, that resin coatings may never be able to protect glass completely against attack by water vapour.)

242. OLIN, J.S., SALMON, M.E. and SAYRE, E.V. (1973) "Neutron activation and electron beam microprobe study of a XIV century Austrian stained glass panel" Extract from the 1976 Report of the Accademia Nazionale dei Lincei, Rome, pp. 99-110.

The paper starts with a discussion of the uses to which analytical data from medieval glasses may be put; to reveal (a) the chemical nature of the glasses (e.g. durability, etc); (b) the nature of the raw materials used for making them; and (c) the homogeneity of the glass throughout the panel. Thus glasses of different colours may have had different origins (even from the same panel) and this can be investigated by making chemical analyses. They also state "Theophilus, writing in the twelfth century, stated at that time blue window glass was prepared in France by melting down ancient glass vessels of that color and adding a little colorless glass to it). (RGN - this might have been the case with the unusual 12th-century blue soda glass from York Minster - see also Dr Eva Frodl-Kraft's comments in section 5 of N.L. No.20.

The main part of the paper is concerned with the analytical results (and the techniques) used in studying the 25 samples taken from the St Erhard panel from the Church of St Leonhard in Lavantal, Austria (now in the Cloisters Museum, New York, see Col.2 of p.6 of N.L. No.19, and abstract No.203, p.10 of N.L. No.17). The glass was mainly a lime-rich (18.9% to 21.9% CaO), potash-rich (21.8% to 25.6% K_2O), low silica (47-49% SiO_2) glass, but the only green sample which they tested was quite different because it contained (apparently) about 20% of lead oxide (compare the Austrian green glasses Nos. 39, 40, 68, 82 and 91 on pages 11-14 of N.L. No.21). Eleven trace elements were studied by neutron activation analysis and the green glass was again unusual in containing 105 parts per million (ppm) of Sb_2O_3, compared with 0.5-4.3 ppm in the other glasses, except the blue one which had 30 ppm. The hafnium contents were in the range 0.2-0.8 ppm, i.e. much less than the 8 ppm found in the York Minster blue glass (see section 4 of this N.L.). The other trace elements were:-

220-660 ppm Rb_2O; 1200-4900 ppm BaO; 0.5-1.5 ppm Cs_2O; 0.9-1.2 ppm Sc_2O_3; 0.7-1.6 ppm CeO_2; 0.1-0.4 ppm Eu_2O_3; 0.4-1.6 ppm ThO_2; 6-12 ppm Cr_2O_3; 3-7 ppm CoO (except that the green glass had 114 ppm and the blue glass contained 930 ppm).

243. SANDERS, D.M., PERSON, W.B. and HENCH, L.L. (1974) "Quantitative analysis of glass structure with the use of infra-red reflection spectra" Applied Spectroscopy, 1974 28 247-256.

This is a highly scientific paper concerned with a novel technique for analysing glasses, with special reference to phase separation. The authors found that, with one of their (rather unusual) glasses the process of grinding the surface "had to be carried out in a totally dry environment without even momentary exposure of the sample to water vapor in the atmosphere" otherwise they obtained a faulty result owing to the low chemical durability of the glass.

244. SIMPSON, H.E. (1953) "Some factors affecting the testing of surface durability of flat glass" J.Amer. Ceram. Soc., 1953 36 143-146.

This important paper seems to have been overlooked by glass conservationists for more than 20 years. The author subjected 50mm x 50mm samples of flat glass to alternate 2-hour cycles of condensation and evaporation (a few degC above and below saturation at 55°C), and the resulting deterioration of the surface was observed by measuring the scattering of light.

Most of the glasses tested developed "considerable haze" (visible dulling of the surface) after 15 to 30 days of the 2-hour cycles of condensation (i.e. after 180 to 360 alternate cycles of condensation) and the results which have been selected for mention in this abstract represent the haze after 55 days (i.e. after 660 cycles).

The freshly-manufactured samples, having a fire-finished surface, developed a "haze" of 21% (after these 660 cycles). The samples were carefully cleaned in a special manner (with calcium carbonate slurry) and then treated in various ways.

Dry storage - some were stored in a "dry box" (the usual shipping box) interleaved with paper at 70°F(21°C) but the samples developed 38% haze after 1 month (and 660 cycles); 48% after 2 months; 71% after 3 months; and 66% after 4 months (a different set of samples!).

Damp storage - Other samples were stored in a damp basement where the humidity was high and the temperature varied considerably. All the samples deteriorated rapidly and had haze values between 65% and 75% after 1 or more months (the results were somewhat random).

Water storage - Yet other samples were stored under water at 21°C and developed about 65% haze after 1 to 3 months and 85% haze after 1 year.

Grinding and polishing - Some samples were ground and polished to remove the fire-finished surface to a depth of 0.5mm and they developed 50 to 75% haze. (RGN - thus it seems that all of these treatments; dry box for at least 3 months; damp cellar for 1 month; and grinding and polishing can destroy the special durability conferred by the fire-finished surface. Thus the claims made by some conservators, that the flame-fired surface must not be removed because it could protect the glass for many years, has no support from this work!)

Other experiments showed that treatment of the surface with various strengths of sulphuric acid improved the durability considerably, but only for a limited time because 280 cycles of condensation destroyed even the best improvement in durability. (RGN - this acid treatment would be feasible only on a modern glass, and most medieval glass would be harmed by the treatment.) Treatment with sodium hydroxide was always disadvantageous.

* * * * *

NOTE: Will readers of these News Letters please draw my attention to any papers which should be abstracted here. It would be particularly helpful if photocopies of the papers could be supplied. My address is
5 Hardwick Crescent, Sheffield, S11 8WB,
England.

Roy Newton.

1076 Reproduced by the University of York Printing Unit